ALTAR'D STATE

20 — 25

at HOME

# Skyler Dining Table

Assembly and installation instructions

# SKYLER DINING TABLE ( GREY )
# 1004798177
# Assembling Instruction

1.

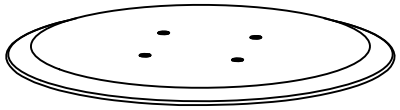

Table Top - 1 Pc(s)

2.

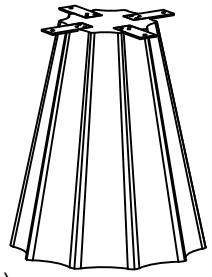

Base Leg - 1 Pc(s)

3.

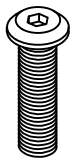

Allen Bolt M8 x 30 - 4 Pc(s)

4.

Spring Washer - 4 Pc(s)

5.

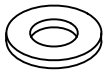

Washer - 4 Pc(s)

A.

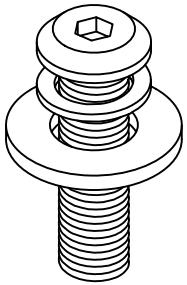

6.
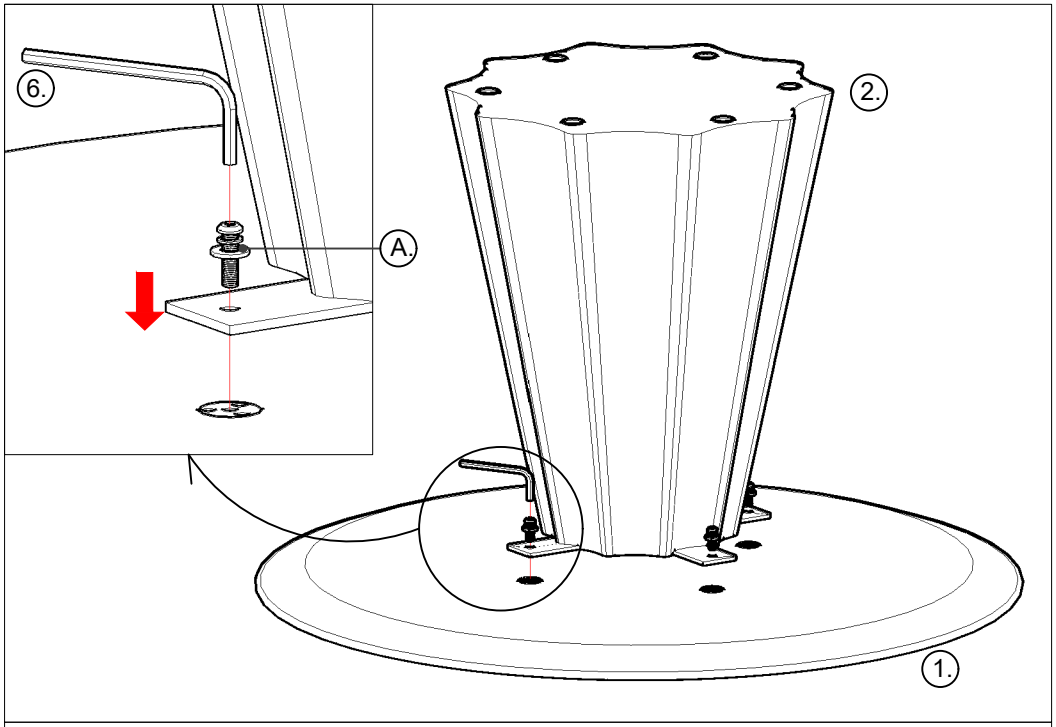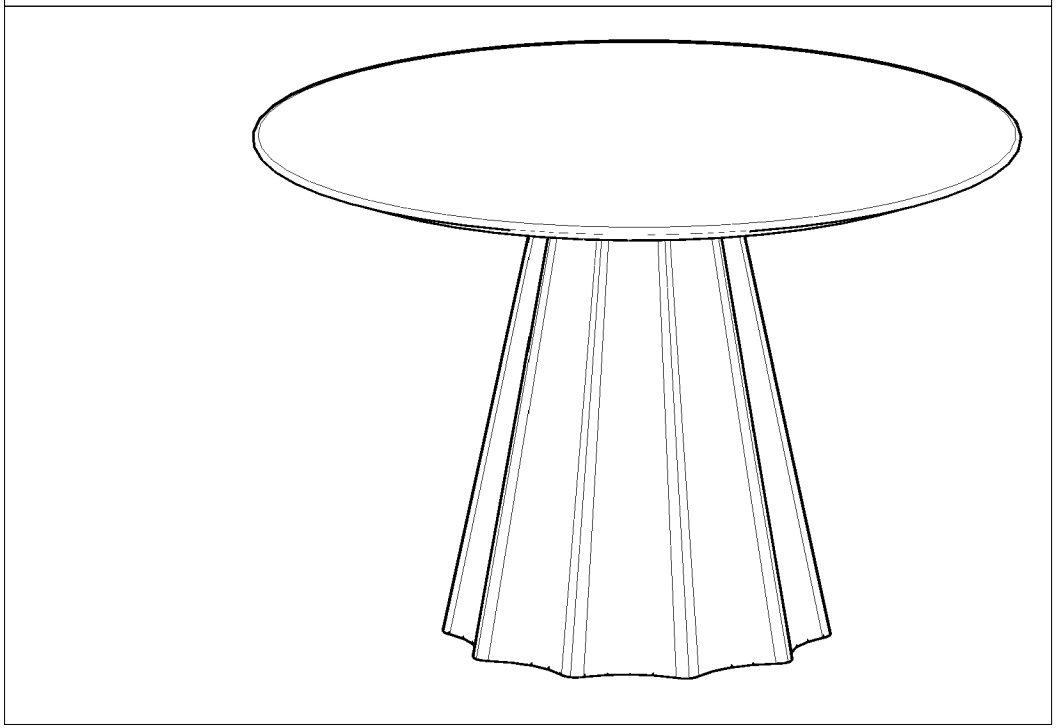
Allen Key M5 - 1 Pc(s)